Republic of the Philippines
CIVIL AVIATION AUTHORITY OF THE PHILIPPINES

2010-50213000

November 28, 2025

**REQUEST FOR PRICE QUOTATION**

The Civil Aviation Authority of the Philippines (CAAP) Area Center III hereby invites interested bidders for the REHABILITATION OF SECURITY FENCE AT PLARIDEL AIRPORT.

Approved budget for the project – Php 396,077.62

Please secure Canvass form from www.philgeps.gov.ph or at the Regional Office, Area Center III during office hours Monday to Friday starting December 1, 2025.

The sealed quotation shall be submitted at the Civil Aviation Authority of the Philippines Regional Office, Area Center 3, Civil Aviation Complex, Clark Freeport Zone, Mabalacat Pampanga on or before December 9, 2025 at 10:00am to the Bids and Awards Committee and will be opened on the same date at 2:00pm. Indicate in the sealed envelope the name of the Project you are participating.

The CAAP Area Center III reserves the right to accept or reject any bid, and to annul the bidding process and reject all Bids at any time prior to contract award without thereby incurring any liability to the affected Bidder/s.

You may call CAAP Area Center III BAC Secretariat Members at 0282464988 local 2258 for details.

Very truly yours,

**ATTY. ROAN JILL E. HABOC**
BAC Chairperson

Republic of the Philippines

CIVIL AVIATION AUTHORITY OF THE PHILIPPINES

# REQUEST FOR QUOTATION

**Date :** _____

**APP Item No :** **2010-50213000**

*Company/Business Name:* [1] _____

*Address:* _____

*Business/Mayor's Permit No.:* _____

*TIN:* _____

*PhilGEPS Registration Number* ***(required for ABC above 50k )*** *:* _____

The **Civil Aviation Authority of the Philppines - AreaCenter III**, through its Bids and Awards Committee (BAC), intends to procure the **Rehabilitation of Security Fence at Plaridel Airport** through **Section 53.9 (Negotiated Procurement - Small Value Procurement)** of the 2016 Revised Implementing Rules and Regulations of Republic Act No. 9184.

Please quote your **best offer** for the item/s described herein, subject to the Terms and Conditions provided on this Request for Quotation (RFQ). Submit your quotation duly signed by you or your duly authorized representative **not later than the deadline on December 09, 2025 at 10:00 a.m.**

| Document | Remarks |
|---|---|
| **Copy of 2025 Mayor's or Business Permit** | Valid 2025 Mayor's or Business Permit. |
| **Original Notarized Omnibus Sworn Statement** (GPPB-Prescribed Form) **(For** | In the prescribed template. Downloadable at: https://www.gppb.gov.ph/wp-content/uploads/2023/06/Omnibus-Sworn-Statement-Revised.docx |
| **PhilGEPS Registration Certificate (For ABCs above P50k)** | Valid PhilGEPS Certificate of Registration (COR). |
| **PCAB License (For ABCs above P50k if applicable for Repair & Maintenance and Infrastructure)** | Valid PCAB License. |
| **Latest Annual Income / Business Tax Return (For ABCs above P500k)** | Annual Income Tax Return from previous year must be submitted. |

Official Copy

| | | |
|---|---|---|
| **Performance Security (for ABCs above P50k)** | Once the Notice of Award of the Project is given, the winning bidder is required to submit Performance Security prior to the signing of the contract as prescribed by Section 39 of Updated 206 Revised IRR of RA 9184 to wit: | |
| | **Form of Performance Security** | **Amount of Performance Security (Not less than the required percentage of the Total Contract Price)** |
| | **a.)** Cash or cashier's/manager's check issued by a Universal or Commercial Bank.<br>For biddings conducted by LGUs, the cashier's/manager's check may be issued by other banks certified by the BSP as authorized to issue such financial instrument. (a) | Goods and Consulting Services – Five percent (5%)<br><br>Infrastructure Projects - Ten percent (10%) |
| | **b.)** Bank draft/guarantee or irrevocable letter of credit issued by a Universal or Commercial Bank: Provided, however, That is shall be confirmed or authenticated by a Universal or Commercial Bank, if issued by a foreign bank.<br>For biddings conducted by LGUs, bank draft/guarantee, or irrevocable letter of credit may be issued by other banks certified by the BSP as authorized to issue such financial instrument. (a) | |
| | **c.)** Surety bond callable upon demand issued by a surety or insurance company duly certified by the Insurance Commission as authorized to issue such security. | Thirty percent (30%) |
| | Non-submission of Performance Security shall warrant disqualification of bids as mandated by Section 40 of Updated 2016 Revised IRR of RA 9184. | |

For any clarification, you may contact us at telephone no. ***(045) 499-1663*** or email address at ***bac_area3@caap.gov.ph*** .

**ROAN JILL E. HABOC**
BAC Chairperson

[1] In case of discrepancy on the business name as reflected on this RFQ and as reflected in the Business Permit, the latter shall prevail.

Official Copy

**INSTRUCTIONS:**

Note: Failure to follow these instructions will disqualify your entire quotation.

**(1)** Do not alter the contents of this form in any way.

**(2)** The use of this RFQ is **highly encouraged** to minimize errors or omissions of the required mandatory provisions. In case of any changes, bidders must use or refer to the latest version of the RFQ, except when the latest version of the RFQ **only** pertains to deadline extension.

If another form is used other than the latest RFQ, the quotation shall contain all the mandatory requirements/provisions including manifestation on the agreement with Terms and Conditions below.

In case a prospective supplier/service provider submits a filled-out RFQ with a supporting document (i.e., a price quotation in a different format), both documents shall be considered unless there will be discrepancies. In this case, provisions in the RFQ shall prevail.

**(3)** **All mandatory technical specifications (with asterisk) must be complied with.** Failure to comply with the mandatory requirements shall render the quotation ineligible/disqualified.

**(4)** Quotations may be submitted through electronic mail at **bac_area3@caap.gov.ph.**

**(5)** Quotations, including documentary requirements, received after the deadline shall not be accepted. For quotations submitted via electronic mail, the date and time of receipt indicated in the email shall be considered.

**TERMS AND CONDITIONS:**

1. Bidders shall provide correct and accurate information required in this form.
2. Any interlineations, erasures, or overwriting shall be valid only if they are signed or initialed by you or any of your duly authorized representative/s.
3. Price quotation/s must be valid for a period of thirty (30) calendar days from the deadline of submission.
4. Price quotation/s, to be denominated in Philippine peso, shall include all taxes, duties, and/or levies payable.
5. Quotations exceeding the Approved Budget for the Contract shall be rejected.
6. In case of two or more bidders are determined to have submitted the Lowest Calculated Quotation/Lowest Calculated and Responsive Quotation, CAAP Area Center III shall adopt and employ "draw lots" as the tie-breaking method to finally determine the single winning provider in accordance with GPPB Circular 06-2005.
7. Award of contract shall be made to the lowest quotation which complies with the technical specifications, requirements and other terms and conditions stated herein.
8. The item/s shall be delivered according to the accepted offer of the bidder.
9. Item/s delivered shall be inspected on the scheduled date and time of the CAAP Area Center III. The delivery of the item/s shall be acknowledged upon the delivery to confirm compliance with the technical specifications
10. Payment shall be made after delivery and upon the submission of the required supporting documents, i.e., Order Slip and/or Billing statement, by the supplier, contractor, or consultant. Our Government Servicing Bank, i.e., the Land Bank of the Philippines, shall consultant not earlier than twenty-four (24) hours, but not later than forty-eight (48) hours, upon receipt of our advice. Please note that the corresponding bank transfer fee, if any, shall be chargeable to the account of the supplier, contractor, or consultant.

Official Copy

11. Liquidated damages equivalent to one-tenth of one percent (0.1%) of the value of the goods/ services/equipment not complied/delivered within the prescribed delivery period shall be imposed per day of delay. The CAAP Area Center III may terminate the contract once the cumulative amount of liquidated damages reaches ten percent (10%) of the amount of the contract, without prejudice to other courses of action and remedies open to it.
12. All transactions are subject to withholding of credible Government Taxes per revenue regulation(s) of the Bureau of Internal Revenue.
13. For first time bidder, you are required to submit a portfolio of manpower and equipment of your company.
14. Upon Post Qualification, the Winning Bidder, must also submit Tax receipts from Bureau of Customs as proof of payment of all taxes and duties due on the equipment, if the said equipment was bought outside the Philippines.

After having carefully read and accepted the Instructions and Terms and Conditions, I/we submit our quotation/s for the item/s as follows:

| **Rehabilitation of Security Fence at Plaridel Airport** | | | | |
|---|---|---|---|---|
| ***Complete Descriptions of Articles*** | ***Qty*** | ***Unit*** | **Unit Price** | ***Total Amount*** |
| **Materials** | | | | |
| 38mmØ G.I. Pipe Schedule 40 | 35 | pcs | | |
| 25mmØ G.I. Pipe Schedule 40 | 1 | pc | | |
| 10mm dia. X 6m round bar | 45 | pcs | | |
| 20mm dia. X 6m round bar | 1 | pc | | |
| Welding Rod | *25* | *kg* | | |
| Ga. 14 Cyclone Wire 2" x 2"x 4' x 12m. | 7 | rolls | | |
| Mild Steel Plate (180mm x 180mm x 10mm Thick with 4 holes for 10mm bolt) | 34 | pcs | | |
| Stiffiner Plate (6mm thk.) | *87* | *kg.* | | |
| 10mm Diameter Anchor Bolts | *136* | *pcs* | | |
| Chemical Bolt Glass Capsule Resin (for 10mm Diameter Bolt) | *136* | pcs | | |
| Gate Cylindrical Flag Hinge (5/8") | *12* | pcs | | |
| Caster Wheel | *4* | pcs | | |
| Oxygen | *2* | Cylinder | | |
| Acetylene | *2* | Cylinder | | |
| Non-Shrink Grout | *2* | Bags | | |
| Red Oxide Primer | *4* | *gals.* | | |
| Silver Paint | *9* | gals. | | |
| Paint thinner | *6* | gals. | | |
| Paint brush 3" | *4* | pcs | | |
| Rugs | *5* | kg. | | |
| Baby roller | *4* | pcs | | |
| Metal Cutting Disk | *50* | pcs | | |
| | | | **Material Cost .....** | |
| | | | | |
| | | | **No. of span for rehabilitation suitable to the alloted budget..... 33** | |
| | | | **Total Material Cost per span . . . . . .** | |
| | | | | |
| | | | | |
| | | | | |
| | | | | |
| | | | | |
| | | | | |
| | | | | |
| | | | | |

Official Copy
BAC Secretariat
CAAP

| | | | | |
|---|---|---|---|---|
| **Equipment** | ***Qty*** | ***No. of Hours*** | ***Rate/Hr*** | |
| Welding Machine (300 A, Gas/Diesel Driven) | *1* | 128 | | |
| Generator Set | *1* | 128 | | |
| Cutting Outfit | *1* | 40 | | |
| | | | **Equipment Cost .....** | |
| | | | | |
| **Labor** | ***Qty*** | ***No. of Days*** | ***Rate/Day*** | |
| Foreman | 1.00 | 16.00 | | |
| Skilled Laborer | 2.00 | 16.00 | | |
| Laborer | 3.00 | 16.00 | | |
| | | | **Labor Cost .....** | |
| | | | | |
| | | | **Total Material Cost .....** | |
| | | | **Total Labor Cost .....** | |
| | | | **Total Equipment Cost .....** | |
| | | | **Total Direct Cost .....** | |

**FINANCIAL OFFER:**

**Terms of Payment:**

Payment shall be made upon completion of all required documents, inspection and acceptance of the end user if needed. Please provide the following bank details.

**Payment Details:**

Name of Payee: _____

TIN: _____

Official Copy
BAC Secretariat
CAA

Please quote your total best offer for the item/s above. Please do not leave any blank items.
Indicate "0" if item being offered is for free.

| **Rehabilitation of Security Fence at Plaridel Airport** |
|---|
| Approved Budget for the Contract: Three Hundred Ninety-Six Thousand Seventy-Seven Pesos and 62/100 Only (PhP 396,077.62) |
| **TOTAL OFFERED QUOTATION** |
| **In Words:** |
| |
| **In Figures:** |
| |
| |

Canvassed By:

**RALPH ROBERT G. URBANO**
Authorized Canvasser

Signature over Printed Name

Position/Designation

Office Telephone/Fax/Mobile Nos.

Email address/es

Official Copy

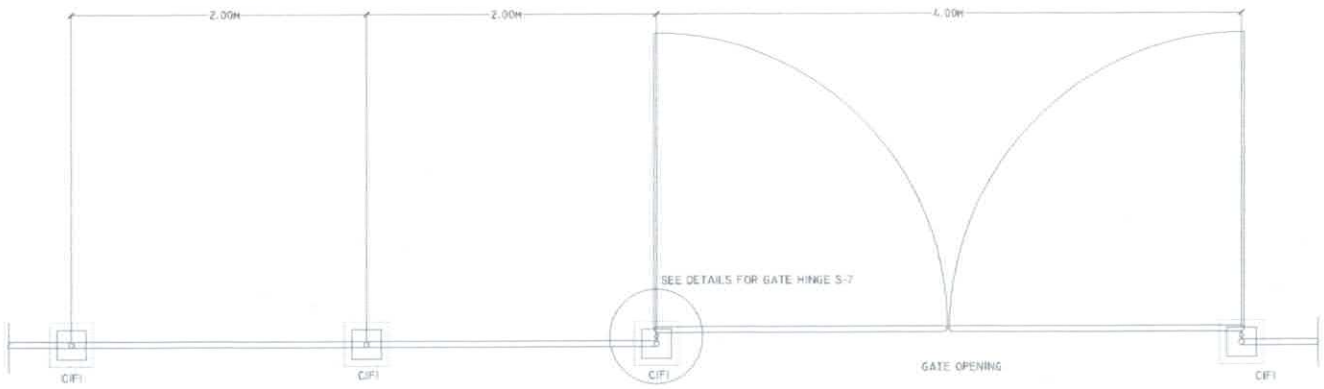


## PLAN OF FENCE AND GATE

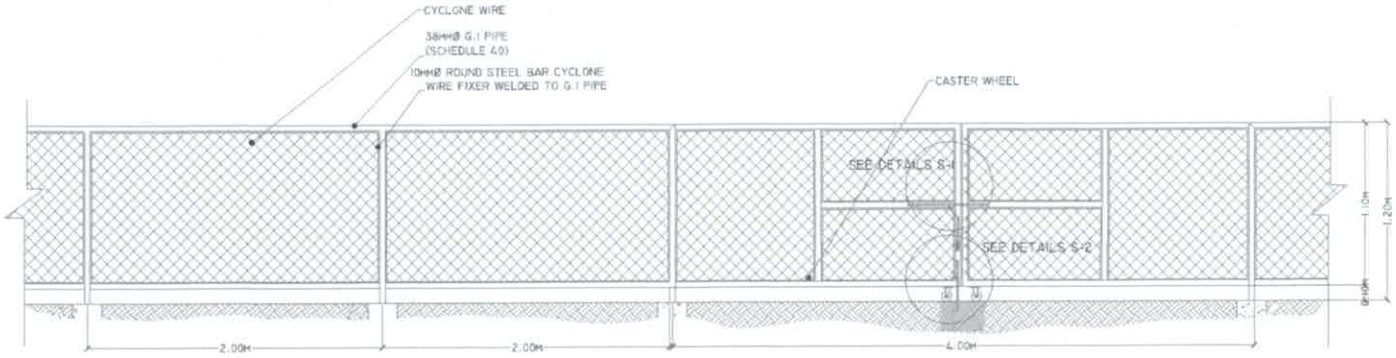


## S-3 ELEVATION OF FENCE AND GATE

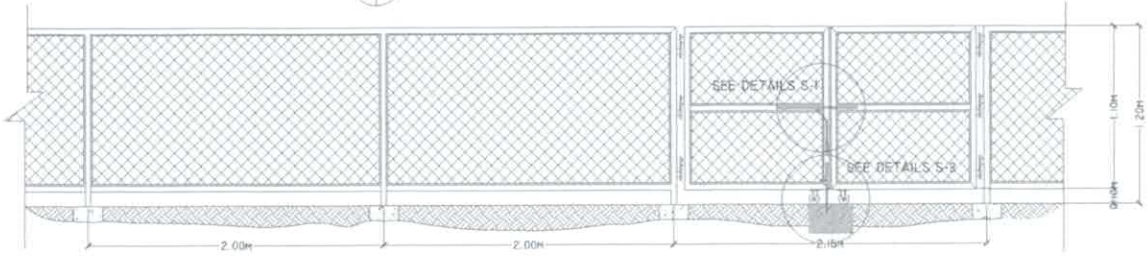


## S-4 ELEVATION OF FENCE AND GATE

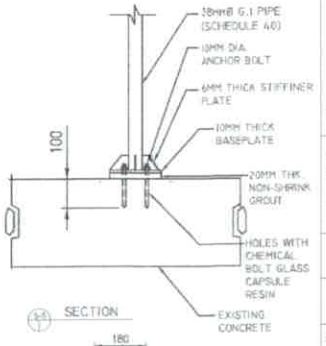


S-5 SECTION

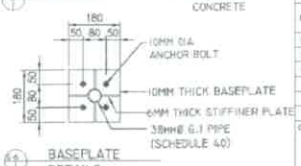


S-6 BASEPLATE DETAILS

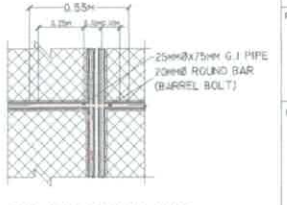


S-7 DET. PLAN OF STEEL GATE PRE-FAB. BARREL LOCK

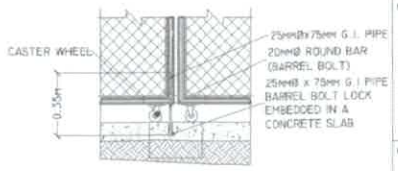


S-8 DET. PLAN OF STEEL GATE PRE-FAB. BARREL LOCK

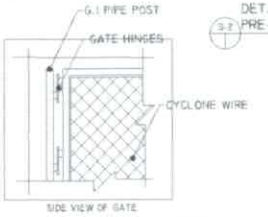


SIDE VIEW OF GATE

S-9 DET. PLAN OF STEEL GATE HINGES

CIVIL AVIATION AUTHORITY OF THE PHILIPPINES

THIS DRAWINGS IS EXCLUSIVE PROPERTIES OF CIVIL AVIATION AUTHORITY OF THE PHILIPPINES AND MUST NOT BE REPRODUCED, EXHIBITED, LOANED NOR COPIED IN PART OR IN WHOLE WITHOUT PROPER PERMISSION AND/OR WRITTEN CONSENT FROM THE DIRECTOR GENERAL CAAP.

AERODROME DEVELOPMENT AND MANAGEMENT SERVICE

INFRASTRUCTURE DEVELOPMENT AND AND DESIGN DIVISION

| DESIGN STAFF | INITIAL / DATE |
|---|---|
| DESIGNED BY: | |
| DRAWN BY: | |
| REVIEWED BY: | |

CHECKED BY:
GLENN O. BELLO
Acting Chief, Planning and Engineering, ADJB

PREPARED BY:
HERBSON F. DOMINGO
Engineer

RECOMMENDED APPROVAL:
PETERPAUL REAL
Officer-in-Charge, Plaridel Airport

APPROVED:
[illegible]
Acting Manager

NOTES/REVISIONS:

PROJECT
REHABILITATION OF SECURITY FENCE

LOCATION
PLARIDEL AIRPORT
Plaridel, Bulacan

SHEET CONTENTS
PLAN OF FENCE AND GATE
ELEVATION OF FENCE AND GATE
SECTION
DETAILS OF BASEPLATE
DET. PLAN OF STEEL GATE PRE-FAB BARREL LOCK

| DRAWING SCALE: | SHEET NO: |
|---|---|
| AS SHOWN | S-01 |

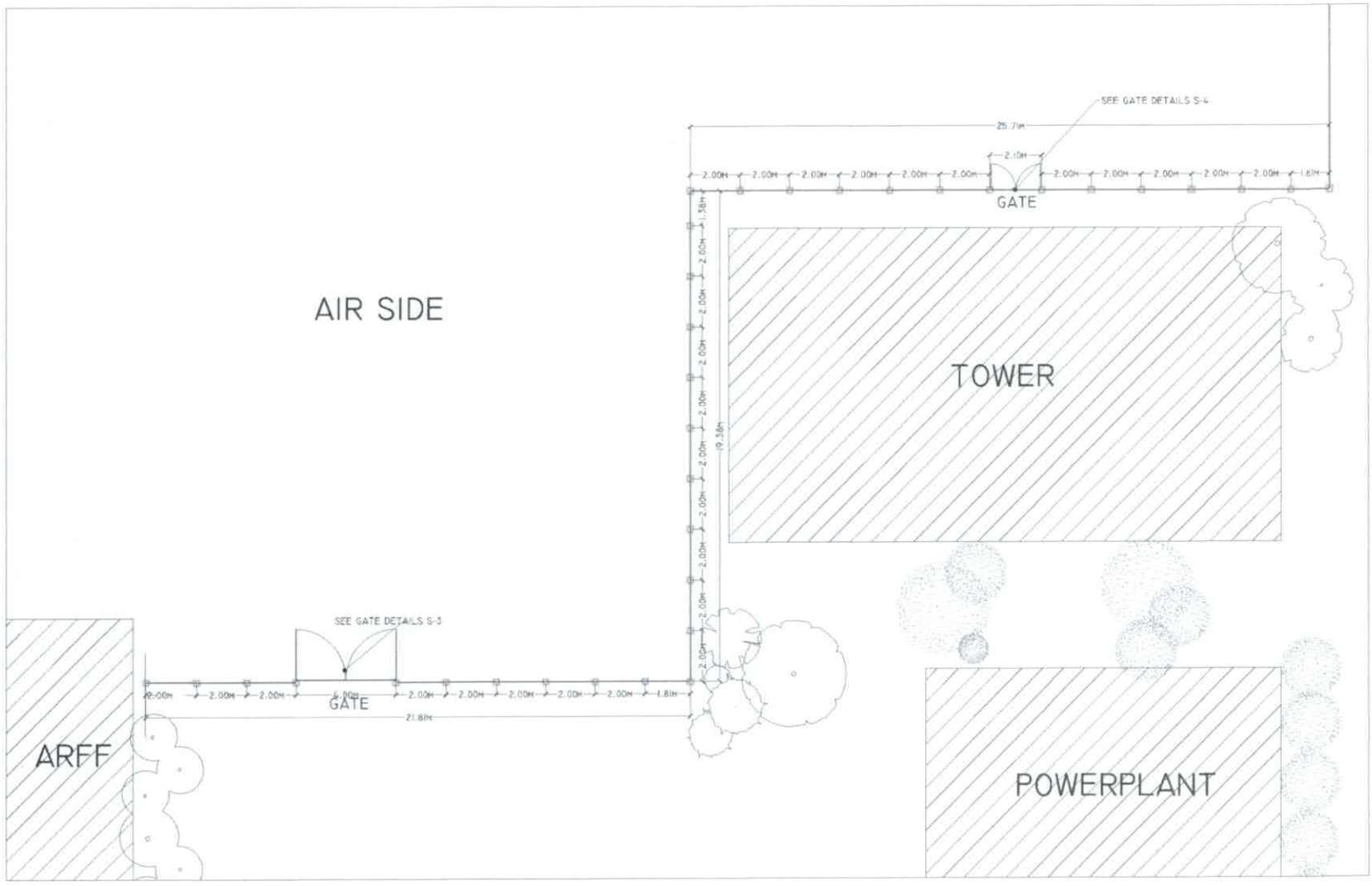


# SECURITY FENCE LAYOUT PLAN

CIVIL AVIATION AUTHORITY OF THE PHILIPPINES

THIS DRAWINGS IS EXCLUSIVE PROPERTIES OF CIVIL AVIATION AUTHORITY OF THE PHILIPPINES AND MUST NOT BE REPRODUCED, EXHIBITED, LOANED NOR COPIED IN PART OR IN WHOLE WITHOUT PROPER PERMISSION AND/OR WRITTEN CONSENT FROM THE DIRECTOR GENERAL CAAP.

AERODROME DEVELOPMENT AND MANAGEMENT SERVICE

INFRASTRUCTURE DEVELOPMENT AND AND DESIGN DIVISION

| DESIGN STAFF | INITIAL / DATE | |
|---|---|---|
| SUPERVISED BY: | | |
| DRAWN BY: | | |
| REVIEWED BY: | | |
| | | |
| | | |

CHECKED BY:

GLENN O. BELLO
Acting Chief, Planning and Engineering, ADM

PREPARED BY:

HENERSON F. DOMINGO
Engineer

RECOMMENDED APPROVAL:

PETER PAUL REAL
Officer-in-Charge,Plaridel Airport

APPROVED:

NOTES/REVISIONS:

PROJECT:

REHABILITATION OF SECURITY FENCE

LOCATION:

PLARIDEL AIRPORT
Plaridel, Bulacan

SHEET CONTENTS:

SECURITY FENCE LAYOUT PLAN

| DRAWING SCALE: | SHEET NO: |
|---|---|
| AS SHOWN | A-01 |

# SCOPE OF WORK

## I. GENERAL

The works to be accomplished by the successful bidder shall consist of furnishing, supervision, labor, materials, supplies, tools and equipment to complete the **Rehabilitation of Security Fence** at Plaridel Airport.

## II. LOCATION OF PROJECT

The Contract to be bid is located at **Plaridel Airport, Plaridel, Bulacan**.

## III. SCOPE OF WORK

The details of work are at best enumerated below, but be noted that the Contract includes all works and services although not specifically mentioned herein, but are needed to fully complete the Project.

The Project covers the supply of labor, materials, mobilization/demobilization, tools/equipment, necessary for **Rehabilitation of Security Fence** at Plaridel Airport with the following scope of works which shall be done in accordance with the approved plans, specifications and provision of contract to wit: (Work shall include but is not limited to the following);

### 1. Mobilization / Demobilization

This work includes mobilization and demobilization of the contractor's forces and equipment necessary for performing the work required under the contract.

a. Mobilization shall include all activities and associated costs for transportation of contractor's personnel, equipment, and operating supplies to the site; establishment of offices, buildings and other necessary general facilities for the contractor's operations at the site.

b. Demobilization shall include the disassembly, hauling/removal of debris/rubbish, and site clean-up of offices, buildings and other facilities assembled on the site.

c. Project Information Sign

The contractor shall provide temporary construction of Project information signage. (Location shall be coordinated with the Project-In-Charge assigned by CAAP).

In accordance with the COA Circular No. 2013-004 dated January 30, 2013. To promote good governance through transparency and accountability, infrastructure projects shall have a tarpaulin signboard, suitability framed for outdoor display at the project location, and shall have the following specifications:

a. White, 3ft by 4ft in size
b. Resolution: 70 dpi
c. Font: Helvetica
d. Font Size: Main Information- 3"; Sub Information-1"
e. Font Color: Black"

**2. Removal of Existing Security Fence**

The work includes labor, materials, minor tools and equipment to complete the Removal of Existing Security Fence. All materials having salvage value shall be placed in neat piles. (Location to be determined by the Project-In-Charge assigned by CAAP)

**3. Installation of New Security Fence**

The work includes labor, materials, and minor tools and equipment for the Installation of New Security, with **33-bay** to cover, as per indicated on the program of work. (Materials to be used and workmanship must be approved by the Project-In-Charge assigned by CAAP).

**4. Painting of the Security Fence**

The work includes labor, materials, minor tools and equipment to complete the Painting of the Security Fence, with ***33 bays*** to cover, as per indicated on the program of work. (Workmanship must be approved by the Project-In-Charge assigned by CAAP)

All scope of work to this item must be according to plan and specifications and approved by the Engineer-In-Charge. Quality and types of materials must conform and to be approved by the Project Engineer assigned by CAAP.

The contractor shall be responsible in providing personal protective equipment (PPE) for staffs and workers, and Safety Inspectors or Safety Engineers on site while construction is ongoing. Regular safety reports should be reported.

The contractor shall be responsible for all laboratory, material testing, environmental compliance certificate (ECC), building and safety permits and survey instruments necessary in the project implementation. All expenses shall be incorporated in the contractor's overhead cost and shall not be considered as pay item.

Prepared by:

**HEHERSON F. DOMINGO**
Engineer, Area Center III

# Omnibus Sworn Statement (Revised)

***[shall be submitted with the Bid]***

---

REPUBLIC OF THE PHILIPPINES )
CITY/MUNICIPALITY OF _____ ) S.S.

## AFFIDAVIT

I, [Name of Affiant], of legal age, [Civil Status], [Nationality], and residing at [Address of Affiant], after having been duly sworn in accordance with law, do hereby depose and state that:

1. *[Select one, delete the other:]*

   *[If a sole proprietorship:]* I am the sole proprietor or authorized representative of [Name of Bidder] with office address at [address of Bidder];

   *[If a partnership, corporation, cooperative, or joint venture:]* I am the duly authorized and designated representative of [Name of Bidder] with office address at [address of Bidder];

2. *[Select one, delete the other:]*

   *[If a sole proprietorship:]* As the owner and sole proprietor, or authorized representative of [Name of Bidder], I have full power and authority to do, execute and perform any and all acts necessary to participate, submit the bid, and to sign and execute the ensuing contract for [Name of the Project] of the [Name of the Procuring Entity], as shown in the attached duly notarized Special Power of Attorney;

   *[If a partnership, corporation, cooperative, or joint venture:]* I am granted full power and authority to do, execute and perform any and all acts necessary to participate, submit the bid, and to sign and execute the ensuing contract for [Name of the Project] of the [Name of the Procuring Entity], as shown in the attached [state title of attached document showing proof of authorization (e.g., duly notarized Secretary's Certificate, Board/Partnership Resolution, or Special Power of Attorney, whichever is applicable;)];

3. [Name of Bidder] is not "blacklisted" or barred from bidding by the Government of the Philippines or any of its agencies, offices, corporations, or Local Government Units, foreign government/foreign or international financing institution whose blacklisting rules have been recognized by the Government Procurement Policy Board, **by itself or by relation, membership, association, affiliation, or controlling interest with another blacklisted person or entity as defined and provided for in the Uniform Guidelines on Blacklisting;**

4. Each of the documents submitted in satisfaction of the bidding requirements is an authentic copy of the original, complete, and all statements and information provided therein are true and correct;

5. [Name of Bidder] is authorizing the Head of the Procuring Entity or its duly authorized representative(s) to verify all the documents submitted;

6. *[Select one, delete the rest:]*

   *[If a sole proprietorship:]* The owner or sole proprietor is not related to the Head of the Procuring Entity, members of the Bids and Awards Committee (BAC), the Technical

Working Group, and the BAC Secretariat, the head of the Project Management Office or the end-user unit, and the project consultants by consanguinity or affinity up to the third civil degree;

*[If a partnership or cooperative:]* None of the officers and members of *[Name of Bidder]* is related to the Head of the Procuring Entity, members of the Bids and Awards Committee (BAC), the Technical Working Group, and the BAC Secretariat, the head of the Project Management Office or the end-user unit, and the project consultants by consanguinity or affinity up to the third civil degree;

*[If a corporation or joint venture:]* None of the officers, directors, and controlling stockholders of *[Name of Bidder]* is related to the Head of the Procuring Entity, members of the Bids and Awards Committee (BAC), the Technical Working Group, and the BAC Secretariat, the head of the Project Management Office or the end-user unit, and the project consultants by consanguinity or affinity up to the third civil degree;

7. *[Name of Bidder]* complies with existing labor laws and standards; and

8. *[Name of Bidder]* is aware of and has undertaken the responsibilities as a Bidder in compliance with the Philippine Bidding Documents, which includes:

   a. Carefully examining all of the Bidding Documents;
   b. Acknowledging all conditions, local or otherwise, affecting the implementation of the Contract;
   c. Making an estimate of the facilities available and needed for the contract to be bid, if any; and
   d. Inquiring or securing Supplemental/Bid Bulletin(s) issued for the *[Name of the Project]*.

9. *[Name of Bidder]* did not give or pay directly or indirectly, any commission, amount, fee, or any form of consideration, pecuniary or otherwise, to any person or official, personnel or representative of the government in relation to any procurement project or activity.

10. **In case advance payment was made or given, failure to perform or deliver any of the obligations and undertakings in the contract shall be sufficient grounds to constitute criminal liability for Swindling (Estafa) or the commission of fraud with unfaithfulness or abuse of confidence through misappropriating or converting any payment received by a person or entity under an obligation involving the duty to deliver certain goods or services, to the prejudice of the public and the government of the Philippines pursuant to Article 315 of Act No. 3815 s. 1930, as amended, or the Revised Penal Code.**

**IN WITNESS WHEREOF**, I have hereunto set my hand this __ day of ___, 20__ at _____, Philippines.

*[Insert NAME OF BIDDER OR ITS AUTHORIZED REPRESENTATIVE]*
*[Insert signatory's legal capacity]*
Affiant

***[Jurat]***
*[Format shall be based on the latest Rules on Notarial Practice]*