PURCHASE ORDER

CIVIL AVIATION AUTHORITY OF THE PHILIPPINES
Laoag International Airport, Laoag City

COMMISSION ON AUDIT RECEIVED CAAP LAOAG CITY DATE 8.11.2025

Supplier: **LAOAG ALUMINUM & GLASS SUPPLY & GENERAL MERCHANDISE**
Address: Brgy. 46 Nalbo, Laoag City

P.O. No.: **2025-033**
Date: **July 22, 2025**
Mode of Procurement: **SMALL VALUE PROCUREMENT**

Gentlemen:

Please furnish this office the following articles subject to the terms and conditions contained herein.

Place of Delivery: **LAOAG INTERNATIONAL AIRPORT**
Date of Delivery: **7 DAYS AFTER RECEIPT OF PURCHASE ORDER**
Delivery Term: **FOB - Destination**
Payment Term: **15 DAYS AFTER DELIVERY**

Item No.	Unit	Quantity	Description	Unit Cost	Amount
1	set	1	1/4" x 40" x 72" Glass Board	11,500.00	**11,500.00**
			> Material: 1/4" Tempered Glass		
			> With aluminum/metal stand and frame		
			> With 4 sets metal castor wheels		
(Total Amount in Words)			**ELEVEN THOUSAND FIVE HUNDRED PESOS ONLY**		**Php11,500.00**

In case of failure to make the full delivery within the time specified above, a penalty of one-tenth (1/10th) of one percent for every day of delay shall be imposed.

Very truly yours,

RONALD V. ESTABILLO
(Authorized Official)

Conformed:

Aberi Garcia

LAOAG ALUMINUM & GLASS SUPPLY & GENERAL MERCHANDISE
(Signature Over Printed Name)

Aug 6, 2025
Date

Funds Available:

WINNIE B. JARDINAN
Accountant III
Chief Accountant

Amount:

ALOBS No.:

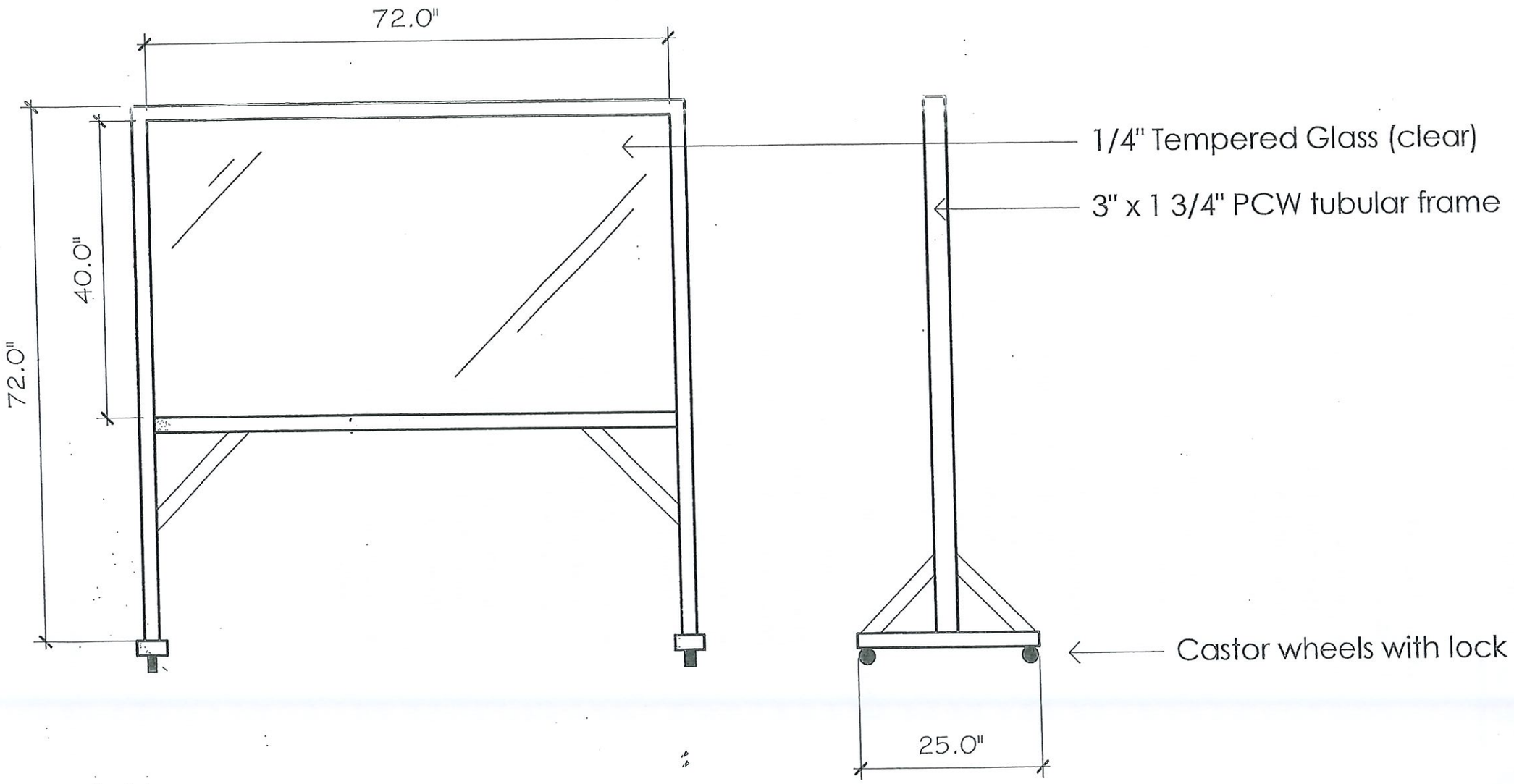
72.0"
40.0"
72.0"
1/4" Tempered Glass (clear)
3" x 1 3/4" PCW tubular frame
Castor wheels with lock
25.0"